卷册检索号 SEARCH NO. OF THE VOLUME
MLHVDC-LCS-ECI-DD-WF-0501 30-B003701S-S0501

第 1 页 共 1 页
PAGE OF

图纸文件目录（首页）

CATALOG OF DRAWING DOCUMENTS (HEAD PAGE)

拉合尔±660kV换流站 工程 施工图 阶段
±660kV Lahore Converter Station PROJECT Detail Design DESIGN STAGE

消防 专业 第 05 卷 第 01 册
Fire Fighting SPECIALITY VOLUME BOOK

卷册名称 消防水池布置图
Volume name Fire Reservoir Plane Arrangement Drawing

批 准 APPROVED BY	
审 核 REVIEWED BY	
设计/勘测 DESIGNED BY/ SURVEYED BY	方正
图 纸 3 张 DRAWING NOS.	打印件 1 本 PRINTED COPIES NOS.

序号 No.	图 号 DRAWING NO.	文 件 名 称 DOCUMENT TITLE	版本 EDITION	张 NOS.	本 NOS.	备注 REMARKS
1	30-B003701S-S0501-001	2×300m³消防水池平面布置图	A	1		
		Plane Arrangement Drawing of Fire Reservoir				
2	30-B003701S-S0501-002	2×300m³消防水池剖面图	A	1		
		Section Drawing of Fire Reservoir				
3	30-B003701S-S0501-003	消防水池材料表	A	1		
		Bill of Materials for Fire Reservoir				

注:

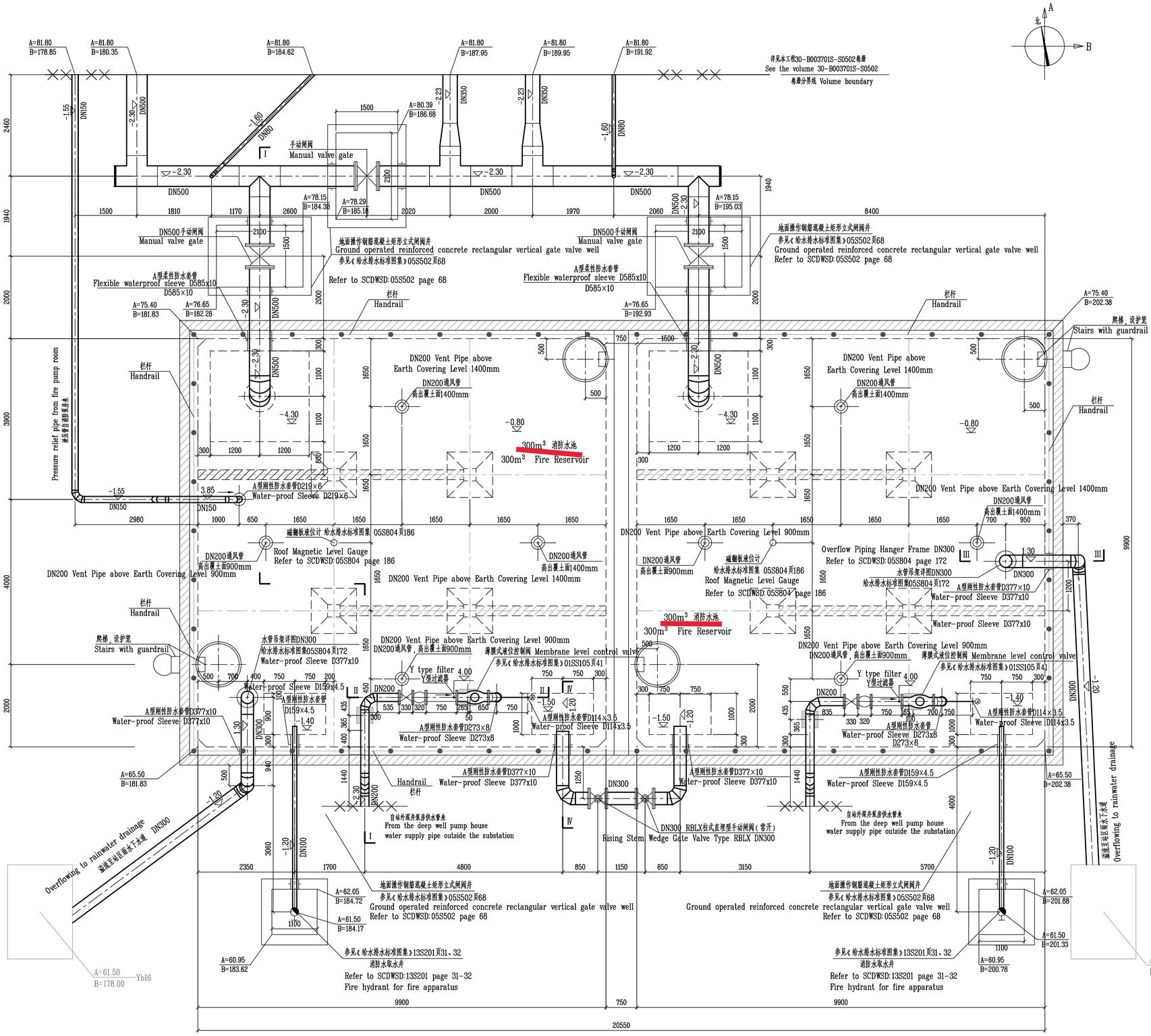

说明：

Note:

1. 本图采用换流站站区AB坐标系统，标高以m计，尺寸以mm计。
1. Architecture AB coordinate system is used in this drawing，the unit of coordinate system is m.The unit of elevation is m and that of all dimensions（except otherwise specified）is mm.
2. 本图标高为相对标高，室内地坪标高±0.00相当于EGM2008高程系统标高193.85m，室外地坪标高为-0.61m。
2. Relative elevation system is applied; 0.00m elevation equals 193.85m EGM2008 elevation. Elevation difference between building ground elevation and substation ground elevation is 0.45m.
3. 图中管道标高除特别注明外均为管中心标高。
3. The elevation of piping shown in this drawing is central piping elevation.
4. 二座消防水池共储存消防用水600m³。
4. The total capacity of two fire reservoirs is 600m³.
5. 所有消防水管内外表面必须进行防腐处理，防腐涂料施工方案详见本工程30-B003701S-S0502卷册01图纸说明。
5. All the inner and outer surfaces of fire fighting water pipes should be treated with anti-corrosive treatment. The detail treatment of anti-corrosive coating is shown in the drawing B003701S-S0502-01 of this project.
6. 水池放空采用移动式潜水排污泵，将池底内的水提升至附近雨水下水道。
6. The portable-type diving sewage pump is used to bring the water of the bottom of the tank to nearby rainwater piping .
7. 池外爬梯设置护笼，池顶设置栏杆。水池结构及池中爬梯见水工结构图纸，有关尺寸以水结图纸为准。
7. The rail is around tank roof and cages are around stairs to protect working staff.The detail of fire reservoir structure and stairs refer to structure speciality relevant drawings.
8. 水池采用半埋地结构，池顶覆土500mm保温，并种植草皮绿化。池壁四周采用砖墙保温。
8. The structure of the tank is half buried structure. The thickness of the earth covering above the top slab is 500mm. To prevent the earth loss above the roof , grass should be planted above the upper slab.
9. 每个水池设一个消防车吸水口（栓）在路边，吸水口为地下式消火栓。设置在消防水取水井内，并应设置明显标识。
9.Each fire reservoir should set a outdoor fire hydrant for fire apparatus on the roadside. The apparatus suction is a underground fire hydrant set in the well.And the signs should be set to identify the yard fire hydrant in substation.
10. 本图位置见厂区总布置图。
10.The location of this drawing refers to the general layout.
11. 剖面图见本卷册02图。
11. Section drawing refers to No. 02 drawing of this volume.
12.考虑到本工程换流站内管线间距较近及阀门井积水问题，本工程采用直埋柱式手动阀阀(带启闭刻度)，不设阀门井（DN>400除外）。采购直埋型手动阀阀时，注意阀杆需要加长，阀门操作机构露出地面0.5~0.8m，阀门材质应采用球墨铸铁。阀阀直埋基础及回填要求参见国标图集13S201页39。
12.In consideration of the short distance between pipelines and water accumulation in valve wells in the substation, this project adopts the manual gate valve with directly embedded column (with opening and closing scales), and the manual gate valves are not set in the valve wells(except DN>400). Please note that the valve stem needs to be lengthened and the valve operating mechanism is exposed to the ground by 0.5~0.8m when purchasing the whole buried manual gate valve.The valve material shall be nodular cast iron. The requirements of foundation and backfilling of the gate valve, please refer to architectural drawings and SCDWSD:13S201, page 39.
13.管道保温：本卷册中室外露天管道（除溢流管外）采取保温措施。方式为包扎30mm厚矿渣棉和0.5mm铝皮保护层，做法见给水排水标准图集16S401。
13.Piping insulation:Outdoor pipes need to be wrapped with 30mm thick slag cotton and 0.5mm aluminum skin protective layer.Detail requirement please refer to architectural drawings and SCDWSD:16S401.
14.本卷册中管道（除消防水泵试验回流管外）的试验压力为1.0MPa，消防水泵试验回流管的试验压力详见本工程30-B003701S-S0502卷册。
14.The test pressure of the pipeline（except the fire pump test return pipe）in this volume is 1.0 MPa. The test pressure of the fire pump test return pipe is detailed in the 30-B003701S-S0502 volume of this project.

Reference Drawings

Drwg. No.	Title

Revisions

	Name	Date	Notes

巴基斯坦默蒂亚里—拉合尔±660kV直流输电工程

±660kV HVDC Project from Matiari to Lahore in Pakistan

NATIONAL TRANSMISSION & DESPATCH COMPANY (NTDC) LIMITED PAKISTAN

CONTRACTOR 国家电网 STATE GRID 中国电力技术装备有限公司 CHINA ELECTRIC POWER EQUIPMENT AND TECHNOLOGY CO.,LTD.

SUBCONTRACTOR East China Electric Power Design Institute Co.,Ltd.

拉合尔±660kV换流站

±660kV Lahore Converter Station

设计阶段 PHASE: 施工图 Detail Design

M L H V D C - L C S - E C I - D D - W F - 0 5 0 1 - 0 0 1 A

	姓名 Name	日期 Date
设计 Designed	石正	2019.5.15
校核 Checked	[illegible]	2019.5.15
审核 Reviewed	[illegible]	2019.5.15
批准 Approved	[illegible]	2019.5.15

2×300m³ 消防水池平面布置图

Plane Arrangement Drawing of Fire Reservoir

比例 Scale: 1:50

图号 DWG NO.: 30-B003701S-S0501-001

版本 REV.: A

A1(841x594)

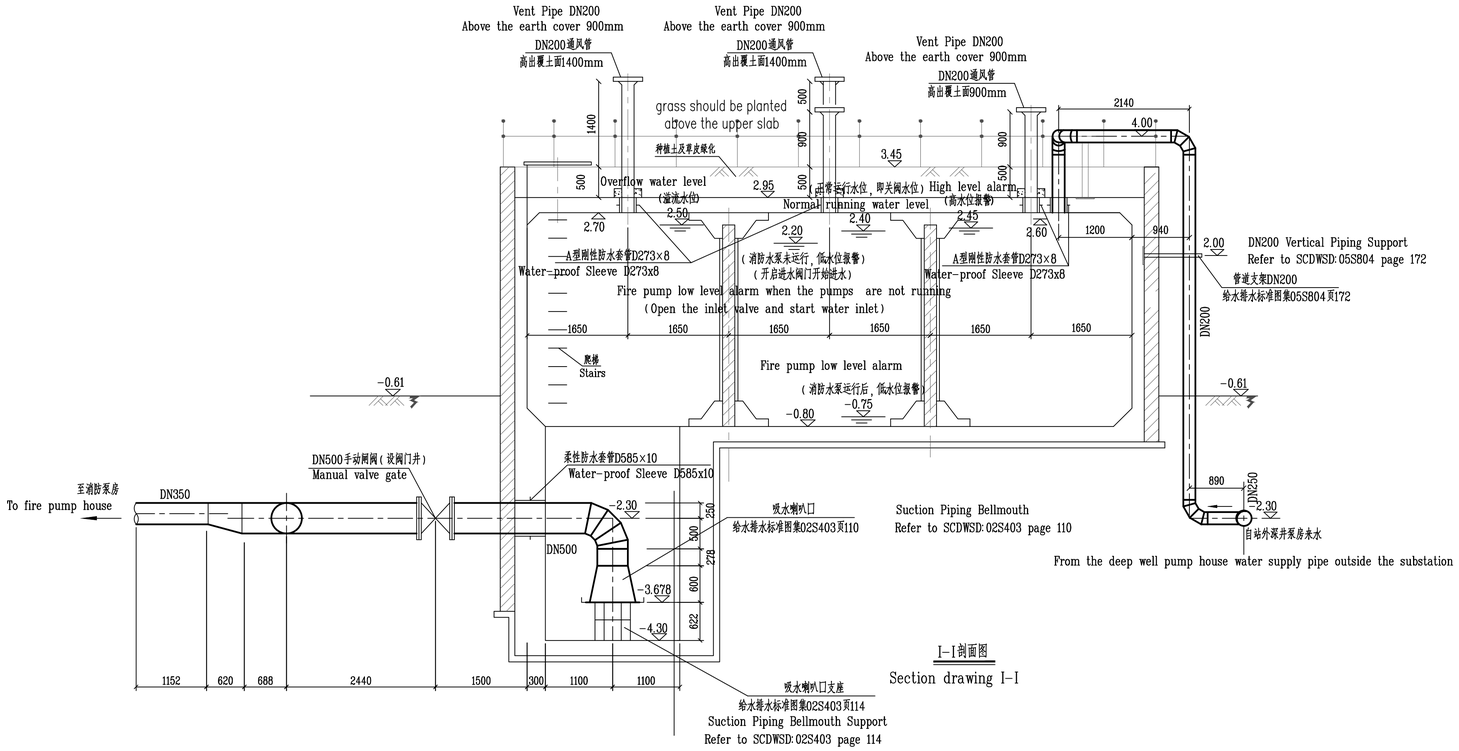

I-I剖面图

Section drawing I-I

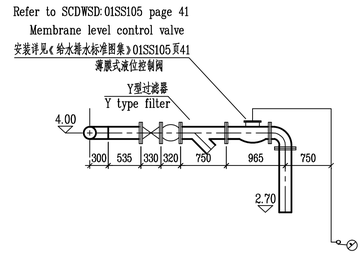

II-II剖面图

Section drawing II-II

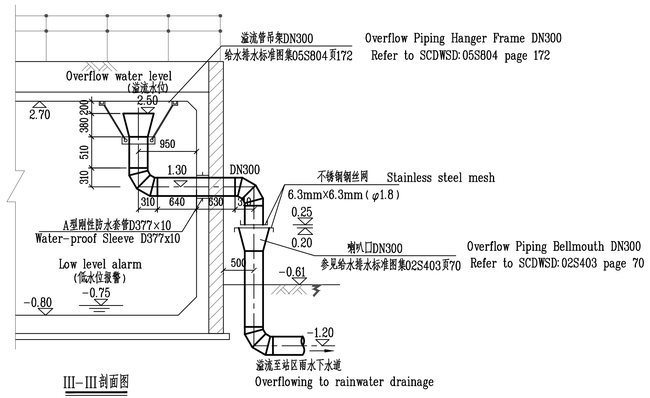

III-III剖面图

Section drawingIII-III

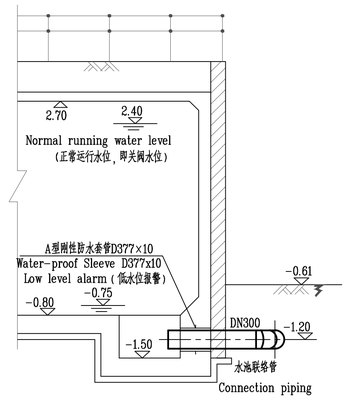

IV-IV剖面图

Section drawing IV-IV

Reference Drawings

Drwg. No.	Title

Revisions

	Name	Date	Notes

巴基斯坦默蒂亚里—拉合尔±660kV直流输电工程

±660kV HVDC Project from Matiari to Lahore in Pakistan

NATIONAL TRANSMISSION & DESPATCH COMPANY (NTDC) LIMITED PAKISTAN

CONTRACTOR 国家电网 STATE GRID 中国电力技术装备有限公司 CHINA ELECTRIC POWER TECHNOLOGY EQUIPMENT CO.,LTD.

SUBCONTRACTOR East China Electric Power Design Institute Co.,Ltd.

拉合尔±660kV换流站

±660kV Lahore Converter Station

设计阶段 PHASE: 施工图 Detail Design

M L H V D C - L C S - E C I - D D - W F - 0 5 0 1 - 0 0 2 A

	姓名 Name	日期 Date
设计 Designed	石正	2019.5.15
校核 Checked	[illegible]	2019.5.15
审核 Reviewed	金新纪	2019.5.15
批准 Approved	[illegible]	2019.5.15

2×300m³ 消防水池剖面图

Section Drawing of Fire Reservoir

比例 Scale: 1:50 | 图号 DWG NO.: 30-B003701S-S0501-002 | 版本 REV.: A

A1(841x594)

编号 No.	名称 Name	规格 Parameters	单位 Unit	数量 Quan	材料 Material	单重 Single 重量(公斤)	总重 Totoal Weight(Kg)	参考图号及备注 Remark
27	A型刚性防水套管	D159×4.5(DN100)	套	4				给水排水标准图集02S404页5
	Water-proof Sleeve		Set					Refer to SCDWSD:02S404 page 5
26	镀锌法兰	DN100, PN=1.0MPa	片	4				GB/T 9119-2010, 包括螺栓、螺母、垫圈
	Galvanized flange		Piece			GB/T 9119-2010, Screw bolt, nut, grommet, etc.included		
25	镀锌法兰	DN200, PN=1.0MPa	片	8				GB/T 9119-2010, 包括螺栓、螺母、垫圈
	Galvanized flange		Piece			GB/T 9119-2010, Screw bolt, nut, grommet, etc.included		
24	镀锌法兰	DN300, PN=1.0MPa	片	4				GB/T 9119-2010, 包括螺栓、螺母、垫圈
	Galvanized flange		Piece			GB/T 9119-2010, Screw bolt, nut, grommet, etc.included		
23	镀锌法兰	DN500, PN=1.0MPa	片	6				GB/T 9119-2010, 包括螺栓、螺母、垫圈
	Galvanized flange		Piece			GB/T 9119-2010, Screw bolt, nut, grommet, etc.included		
22	吸水喇叭口支架	ø529xø770	套	2	Q235A			给水排水标准图集02S403页114
	Suction Piping Bellmouth Support		Set					Refer to SCDWSD:02S403 page 114
21	吸水喇叭口	DN500×8	只	2	Q235A			给水排水标准图集02S403页110
	Suction Piping Bellmouth		Set					Refer to SCDWSD:02S403 page 110
20	溢流水管吊架	DN500×DN750	套	2	Q235A			给水排水标准图集05S804页172
	Overflow Piping Hanger Frame		Set					Refer to SCDWSD:05S804 page 172
19	溢流喇叭口	DN300×DN450	只	2	Q235A			给水排水标准图集02S403页70
	Overflow Piping Bellmouth		Set					Refer to SCDWSD:02S403 page 70
18	通气管	DN200	套	8	Q235A			给水排水标准图集02S403页103
	Vent Pipe		Set					Refer to SCDWSD:02S403 page 103
17	90°弯头	DN150, PN=1.0MPa	只	4	Q235A			
	90°elbow		Set					
16	90°弯头	DN200, PN=1.0MPa	只	8	Q235A			
	90°elbow		Set					
15	90°弯头	DN300, PN=1.0MPa	只	8	Q235A			
	90°elbow		Set					
14	90°弯头	DN500, PN=1.0MPa	只	2	Q235A			
	90°elbow		Set					
13	热浸锌镀锌钢管	D114.3x4(DN100)	米	10	Q235A			PN=1.0MPa, GB/T 3091-2015,包括防腐涂料等
	Galvanized welded pipe		m				PN=1.0MPa, GB/T 3091-2015, (anti-corrosive coating etc.included)	
12	热浸锌镀锌钢管	D219.1x4(DN200)	米	25	Q235A			PN=1.0MPa, GB/T 3091-2015,包括防腐涂料等
	Galvanized welded pipe		m				PN=1.0MPa, GB/T 3091-2015,(anti-corrosive coating etc.included)	
11	焊接钢管	D323.9x6(DN300)	米	30	Q235A			PN=1.0MPa, GB/T 21835-2008,包括防腐涂料等
	Welded steel pipe		m				PN=1.0MPa, GB/T 21835-2008, (anti-corrosive coating etc.included)	
10	焊接钢管	D508×8(DN500)	米	38	Q235A			PN=1.0MPa, GB/T 21835-2008,包括防腐涂料等
	Welded steel pipe		m				PN=1.0MPa, GB/T 21835-2008,(anti-corrosive coating etc.included)	
9	重型铸铁盖座	ø800	只	5				
	Ductile iron manhole cover base		Set					
8	重型铸铁井盖	ø800	只	5				
	Ductile iron manhole cover		Set					
7	钢筋混凝土矩形阀门井	1500mm×2100mm	座	3				给水排水标准图集05S502页68
	Reinforced concrete rectangular valve well		Set					Refer to SCDWSD:05S502page 68
6	Y型过滤器	DN200, PN=1.0MPa	套	2				
	Y type filter		Set					
5	薄膜式液位控制阀	DN200, PN=1.0MPa	套	2				给水排水标准图集01SS105页41
	Membrane level control valve		Set					Refer to SCDWSD:01SS105 page 41
4	橡胶伸缩节	DN200, PN=1.0MPa	套	2	橡胶			包括配套法兰及螺栓、螺母
	Rubber expansion joint		Set		Rubber		Connecting flanges, screw bolts and nuts included	
3	RBLX柱式直埋型手动闸阀	DN300, PN=1.0MPa	套	2				包括配套法兰及螺栓、螺母
	Rising Stem Wedge Gate Valve	Type RBLX	Set				Connecting flanges, screw bolts and nuts included	
2	手动闸阀	DN200, PN=1.0MPa	套	2	球墨铸铁			包括配套法兰及螺栓、螺母
	Manual Gate Valve		Set		Ductile Iron		Connecting flanges, screw bolts and nuts included	
1	手动闸阀	DN500, PN=1.0MPa	套	3	球墨铸铁			包括配套法兰及螺栓、螺母
	Manual Gate Valve		Set		Ductile Iron		Connecting flanges, screw bolts and nuts included	
37	钢筋混凝土矩形阀门井	1100mm×1100mm	个	2				给水排水标准图集05S502页68
	Reinforced concrete rectangular valve well		Set					Refer to SCDWSD:05S502page 68
36	热浸锌镀锌钢管	D165.1x3.5(DN150)	米	20				PN=1.0MPa, GB/T 3091-2015,包括防腐涂料等
	Galvanized welded pipe		m					PN=1.0MPa, GB/T 3091-2015, (anti-corrosive coating etc.included)
35	立管支架	DN300	套	2				给水排水标准图集03S402页114
	Vertical Piping Support		Set					Refer to SCDWSD:03S402 page 114
34	立管支架	DN200	套	4				给水排水标准图集03S402页114
	Vertical Piping Support		Set					Refer to SCDWSD:03S402 page 114
33	水平管支座	DN200	套	4				给水排水标准图集03S402页88
	Horizontal Piping Support		Set					Refer to SCDWSD:03S402 page 88
32	室外地下式消火栓(阀门井式)	SA100/65-1.6型	套	2				含阀门井,安装参见《给水排水标准图集》13S201页31、32
	Underground outdoor fire hydrant		Set					Fire hydrant for fire apparatus, Refer to SCDWSD:13S201 page 31-32
31	A型柔性防水套管	D585×10(DN500)	套	2				给水排水标准图集02S404页5
	Flexible waterproof sleeve		Set					Refer to SCDWSD:02S404 page 5
30	A型刚性防水套管	D377×10(DN300)	套	4				给水排水标准图集02S404页5
	Water-proof Sleeve		Set					Refer to SCDWSD:02S404 page 5
29	A型刚性防水套管	D273×8(DN200)	套	2				给水排水标准图集02S404页5
	Water-proof Sleeve		Set					Refer to SCDWSD:02S404 page 5
28	A型刚性防水套管	D219×6(DN150)	套	1				给水排水标准图集02S404页5
	Water-proof Sleeve		Set					Refer to SCDWSD:02S404 page 5

Reference Drawings

Drwg. No.	Title

Revisions

	Name	Date	Notes

巴基斯坦默蒂亚里—拉合尔±660kV直流输电工程

±660kV HVDC Project from Matiari to Lahore in Pakistan

NATIONAL TRANSMISSION & DESPATCH COMPANY (NTDC) LIMITED PAKISTAN

CONTRACTOR 国家电网 STATE GRID 中国电力技术装备有限公司 CHINA ELECTRIC POWER EQUIPMENT AND TECHNOLOGY CO.,LTD.

SUBCONTRACTOR East China Electric Power Design Institute Co.,Ltd.

拉合尔±660kV换流站

±660kV Lahore Converter Station

设计阶段 PHASE: 施工图 Detail Design

MLHVDC-LCS-ECI-DD-WF-0501-003A

	姓名 Name	日期 Date
设计 Designed	方正	2019.5.15
校核 Checked	曹成	2019.5.15
审核 Reviewed	金新晓	2019.5.15
批准 Approved	[illegible]	2019.5.15

消防水池材料表

Bill of Materials for Fire Reservoir

比例 Scale	图号 DWG NO.	版本 REV.
NTS	30-B003701S-S00501-003	A

A2(594x420)